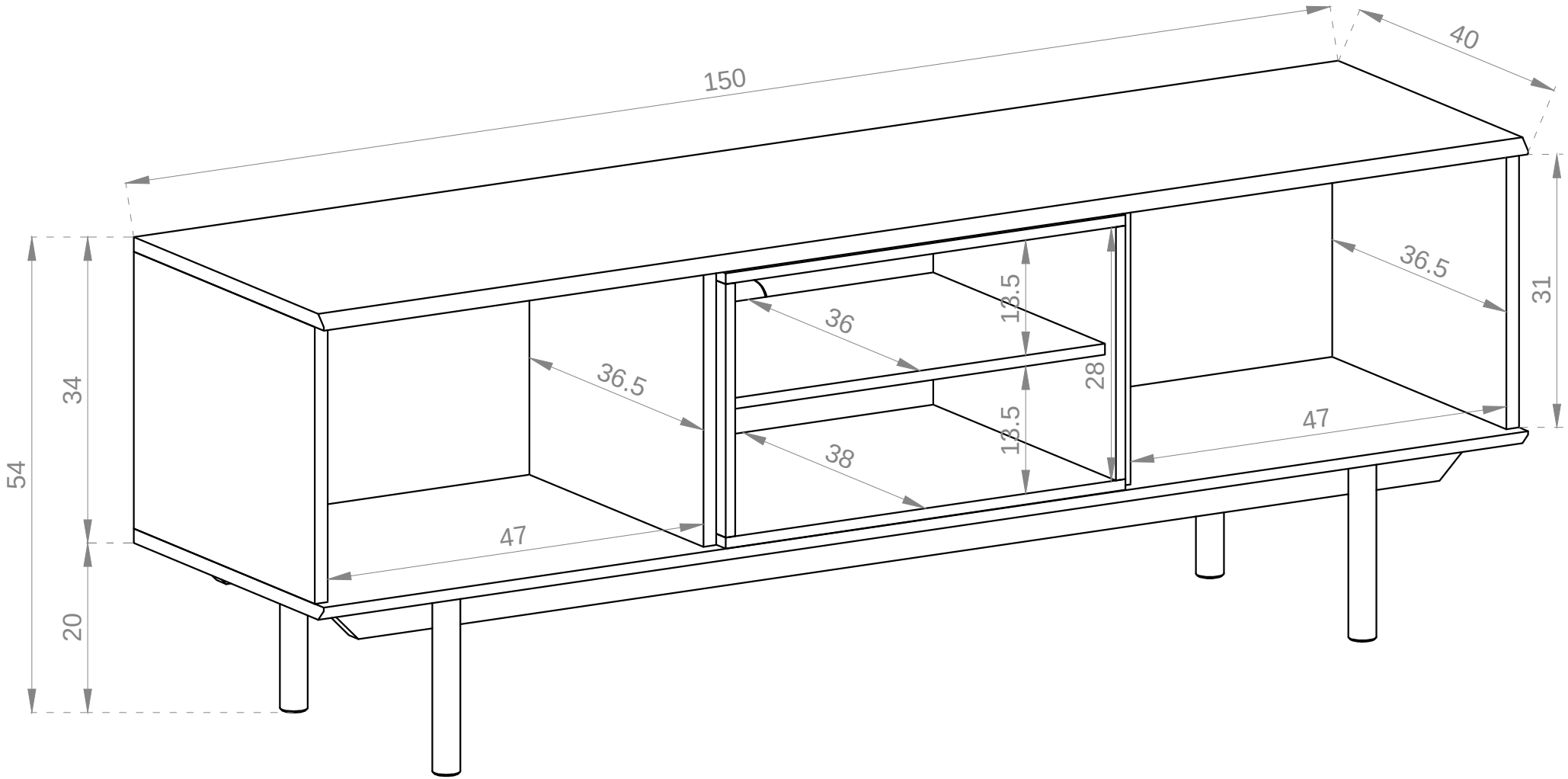
150
40
54
34
20
36.5
47
36
13.5
28
13.5
38
36.5
31
47